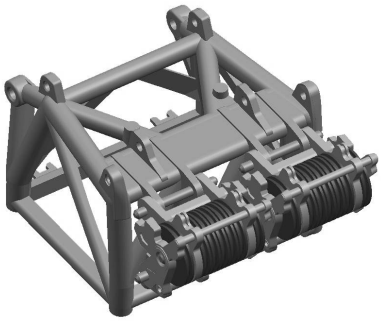

DATA SHEET Model: 053556 Last updated: 23.11.2026

Accessories Roller Package for 8t hook block "Liebherr Raupenkran LR 1600/2"

Manufacturer	Liebherr
Scale	1:87
Category	Accessories & Parts
Carstrucks Type	special vehicles
Collection	heavy duty
Material	plastic
Color	white
Release Date	September/October 2014