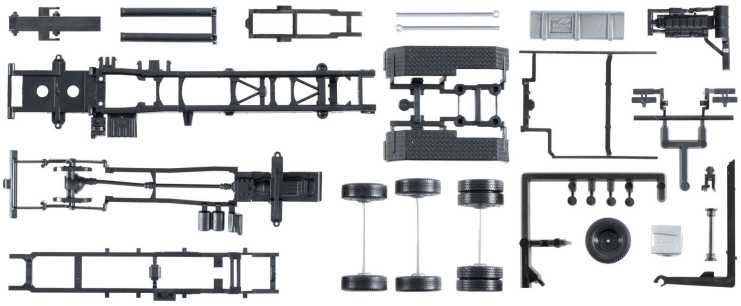

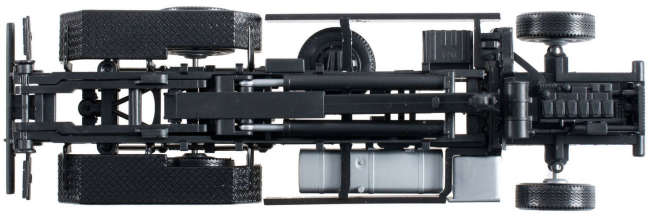

DATA SHEET Model: 084260 Last updated: 24.11.2026

Chassis for tractor MAN TGX Euro 6 with roll-off kinematics, content: 2 pcs.

Manufacturer	MAN
Scale	1:87
Operator	Teileservice
Category	Accessories & Parts
Material	plastic
Color	white
Release Date	May/June 2015